UNIVERSITÀ DEGLI STUDI DI SALERNO
DIPARTIMENTO DI INFORMATICA

Lecture 1 - Introduction to In-Vehicle Communication Protocols

Prof. Esposito Christian

Automotive Cyber Security Academy

Erasmus+
BLENDED INTENSIVE PROGRAMME

::.. ICT in Automotive Industry – 1/2

ICT technologies are pervasively penetrating all the major industries and social aspects, paving the way for advanced applications and innovations.

The automotive industry does not represent an exception, as driving safety, journey time reduction, or fuel saving are key aspects to maximize and ICT technologies are promising solutions to achieve such a goal.

As a matter of fact, the amount of electronics equipment and automatic controls within marketed vehicles are progressively incrementing, promising to bring a radical change to mobility.

::.. ICT in Automotive Industry – 1/2

ICT major
indu vanced
appli

The on, as
drivi re key
aspe mising
solut

As a nt and
auto ssively
incre ty.

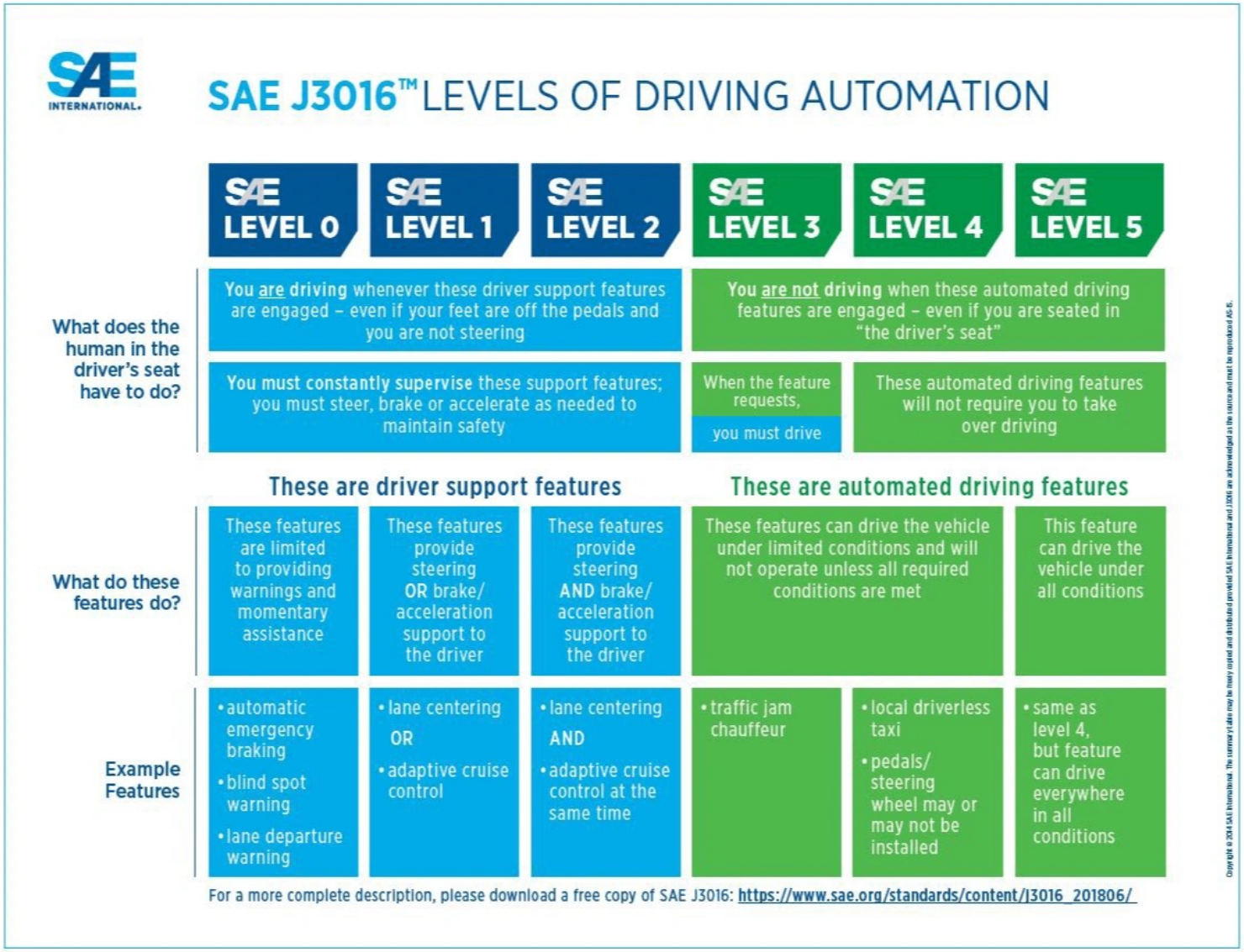

SAE INTERNATIONAL

SAE J3016™ LEVELS OF DRIVING AUTOMATION

	SAE LEVEL 0	SAE LEVEL 1	SAE LEVEL 2	SAE LEVEL 3	SAE LEVEL 4	SAE LEVEL 5
What does the human in the driver's seat have to do?	You are driving whenever these driver support features are engaged – even if your feet are off the pedals and you are not steering			You are not driving when these automated driving features are engaged – even if you are seated in "the driver's seat"		
	You must constantly supervise these support features; you must steer, brake or accelerate as needed to maintain safety			When the feature requests, you must drive	These automated driving features will not require you to take over driving	
	These are driver support features			These are automated driving features		
What do these features do?	These features are limited to providing warnings and momentary assistance	These features provide steering OR brake/ acceleration support to the driver	These features provide steering AND brake/ acceleration support to the driver	These features can drive the vehicle under limited conditions and will not operate unless all required conditions are met		This feature can drive the vehicle under all conditions
Example Features	• automatic emergency braking • blind spot warning • lane departure warning	• lane centering OR • adaptive cruise control	• lane centering AND • adaptive cruise control at the same time	• traffic jam chauffeur	• local driverless taxi • pedals/ steering wheel may or may not be installed	• same as level 4, but feature can drive everywhere in all conditions

For a more complete description, please download a free copy of SAE J3016: https://www.sae.org/standards/content/j3016_201806/

Copyright © 2018 SAE International. The summary rules may be freely copied and distributed provided SAE International and J3016 are acknowledged as the source and must not be reproduced AS-IS.

::.. ICT in Automotive Industry – 2/2

Communication solutions plays a key role in such a progressive evolution, such that existing vehicle are highly connected. Existing vehicles exploit various kinds of vehicular communication solutions:

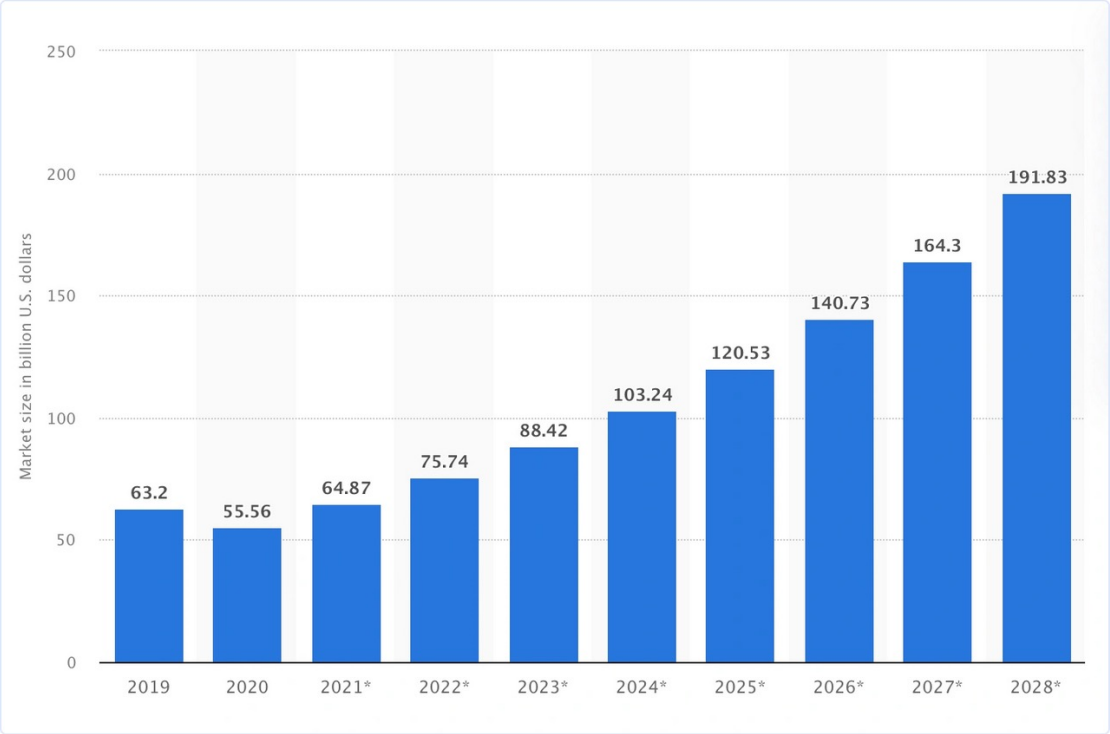

Size of the Global Connected Car Market between 2019 and 2028.

::.. ICT in Automotive Industry – 2/2

Communication solutions plays a key role in such a progressive evolution, such that existing vehicle are highly connected. Existing vehicles exploit various kinds of vehicular communication solutions:

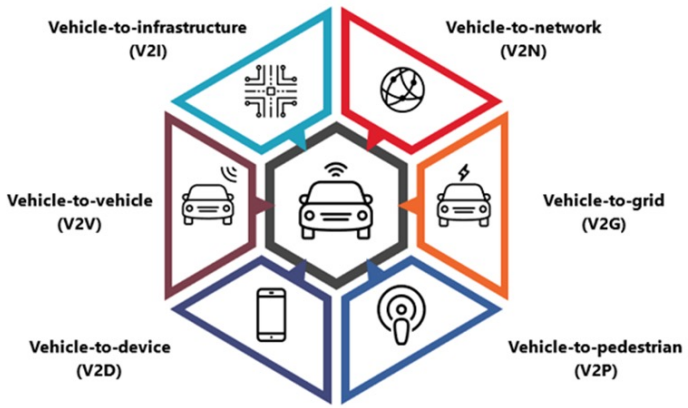

- External communication means: they represent a way to let a vehicle to interact with other vehicles, roadside elements, the occupants or the Internet.

Such solutions are obviously consisting of wireless networking technologies, leveraging on medium-range ad-hoc meshes as in the case of V2V and/or long-range cellular networks.

::.. ICT in Automotive Industry – 2/2

Communication solutions plays a key role in such a progressive evolution. Existing vehicles exploit various kinds of vehicular communication solutions:

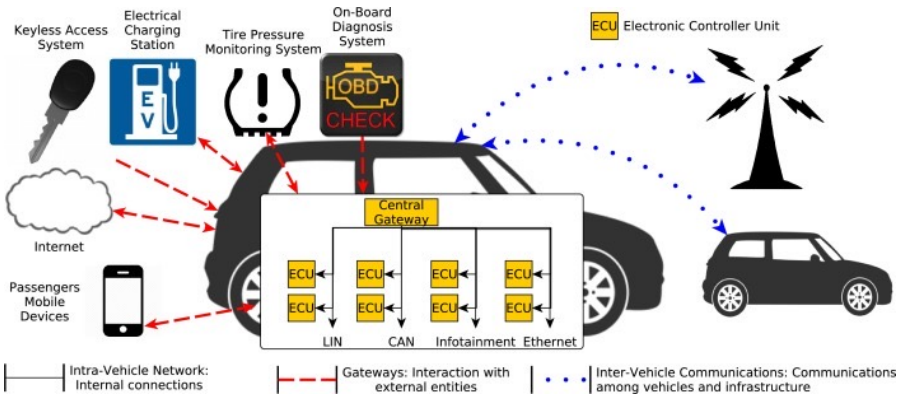

- Internal communication means: sensors within a car needs to exchange data with some smart elements to support semi-automatic decisions and such agents need to communicate with actuators or HMI elements.

Such solutions are mainly consisting of wired solutions deployed within the vehicle, having a proper gateway to integrate it with the possible external wireless networks.

::.. ICT in Automotive Industry – 2/2

Communication solutions plays a key role in such a progressive evolution. Existing vehicles exploit various kinds of vehicular communication solutions:

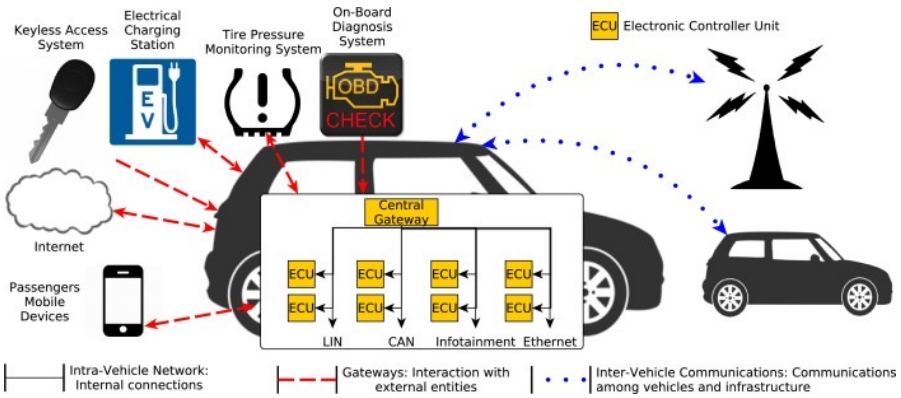

- Internal communication means: sensors within a car needs to exchange data with some smart elements to support semi-automatic decisions and such agents need to communicate with actuators or HMI elements.

Such solutions are mainly consisting of wired solutions deployed within the vehicle, having a proper gateway to integrate it with the possible external wireless networks.

::.. Automotive Applications

The Society of Automotive Engineers (SAE) has divided the different requirements for automotive communication systems into SAE classes:

- Class "A", which supports sensor and actuator applications for convenience operations such as controlling lights, doors or windshield wipers, operated at relatively low data rates, around 20 kbit/s;
- SAE class "B" for nondiagnostic, noncritical applications, with data rates of up to 500 kbit/s and event-driven or period transmissions;
- SAE class "C" is associated with critical and real-time control systems requiring distributed control via high data rate, between 125 kbps and 1 Mbps.

::.. Vehicle Anatomy

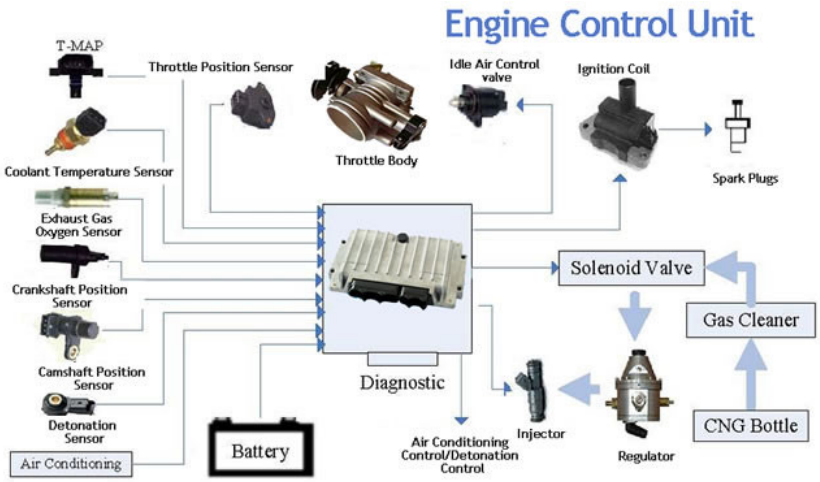

ECU is an embedded system that controls one or more of the electrical systems or subsystems within a vehicle. There is no single ECU, but multiple ones that focus on a specific aspect:

engine control module (ECM), powertrain control module (PCM), transmission control module (TCM), brake control module (BCM or EBCM), central control module (CCM), central timing module (CTM), general electronic module (GEM), body control module (BCM), and suspension control module (SCM).

ECU and controlled elements needs to be interconnected in a proper manner, by using in-vehicle means and protocols.

::.. In-Vehicle Protocols – 1/3

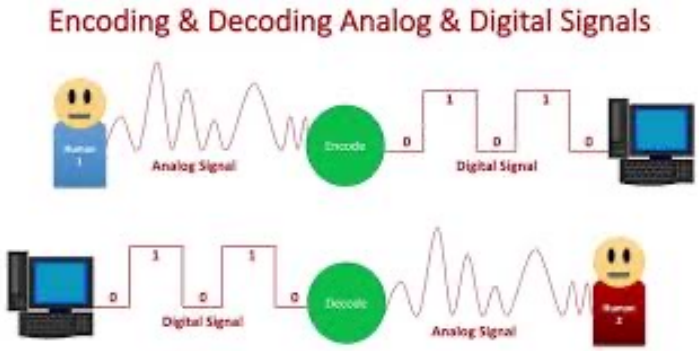

At the beginning, vehicles leveraged on point-to-point analog wires to connect sensors to a control system and/or HMI interacting with the driver.

However, such a traditional solution has been substituted by encoded digital communications with point-to-multi or multi-to-multi connections.

The reasons of such a shift are the following ones:

1. Reducing cable cost
2. Saving packaging space
3. Catering to the demand for higher bandwidth
4. Enhancing communication reliability

::.. In-Vehicle Protocols – 2/3

The variety and diversity of the automotive applications, each with varying demands, and paved the way for the exploitation of various kinds of protocols:

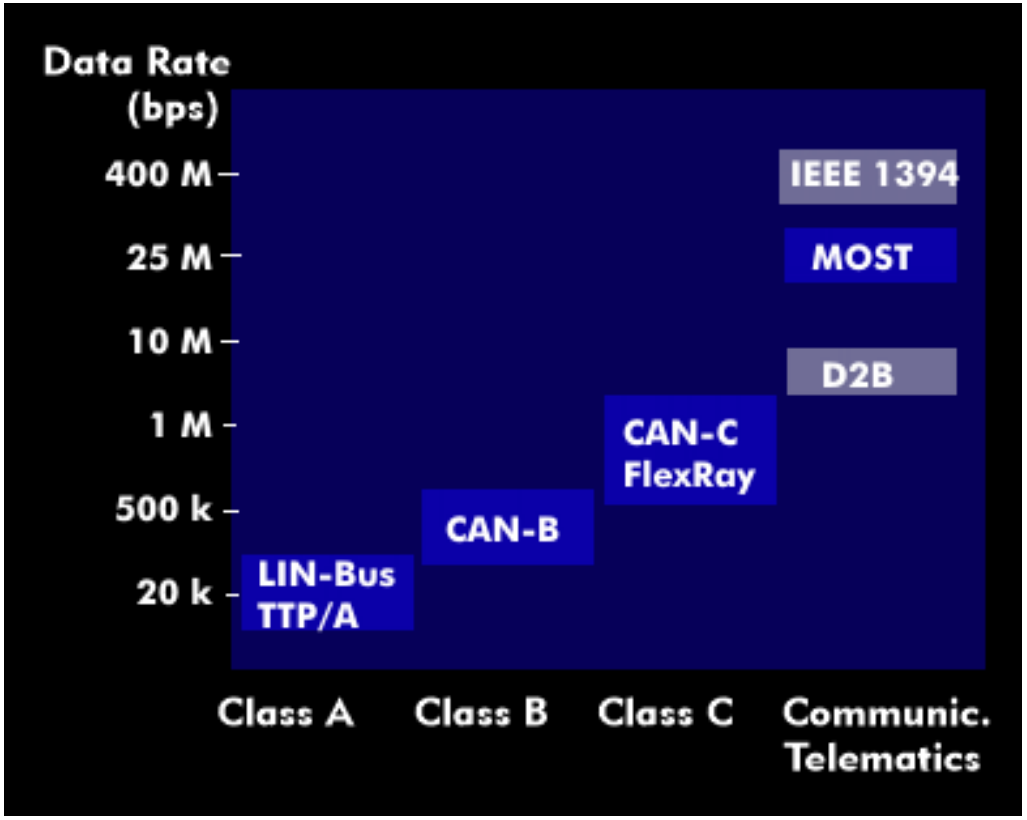

::.. In-Vehicle Protocols – 2/3

The variety and diversity of the automotive applications, each with varying demands, and paved the way for the exploitation of various kinds of protocols:

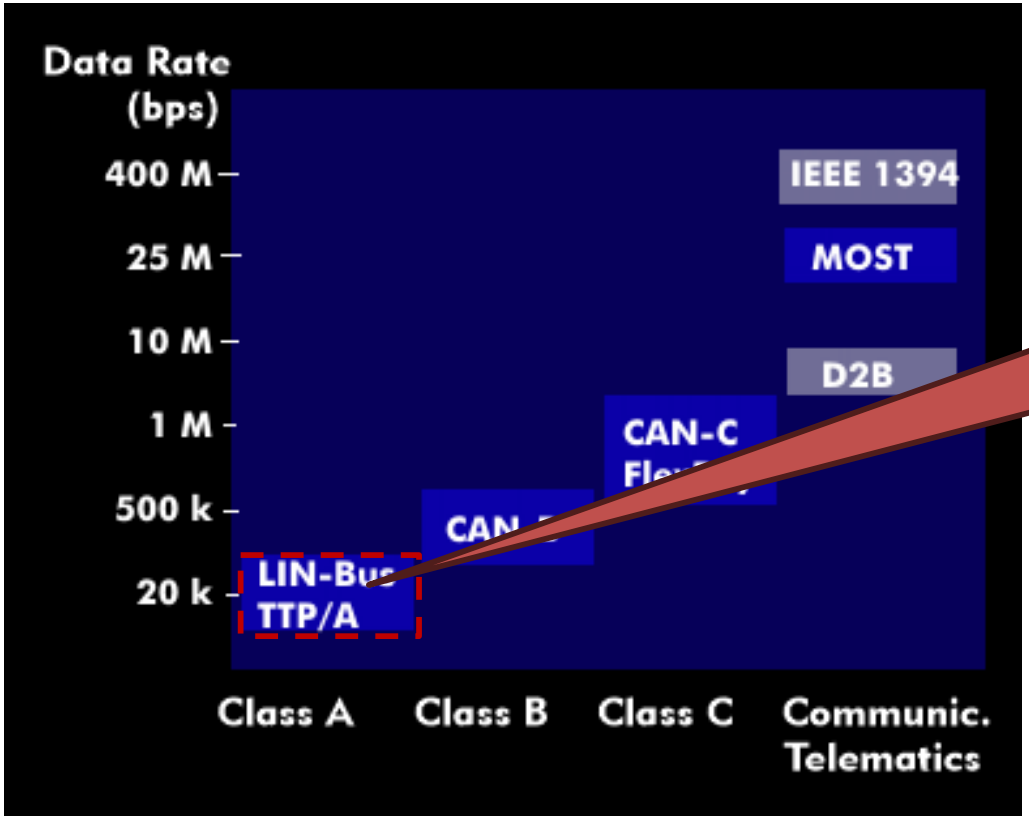

Local Interconnect Network (LIN) is often used in low speed communications with no timing requirements.

::.. In-Vehicle Protocols – 2/3

The variety and diversity of the automotive applications, each with varying demands, and paved the way for the exploitation of various kinds of protocols:

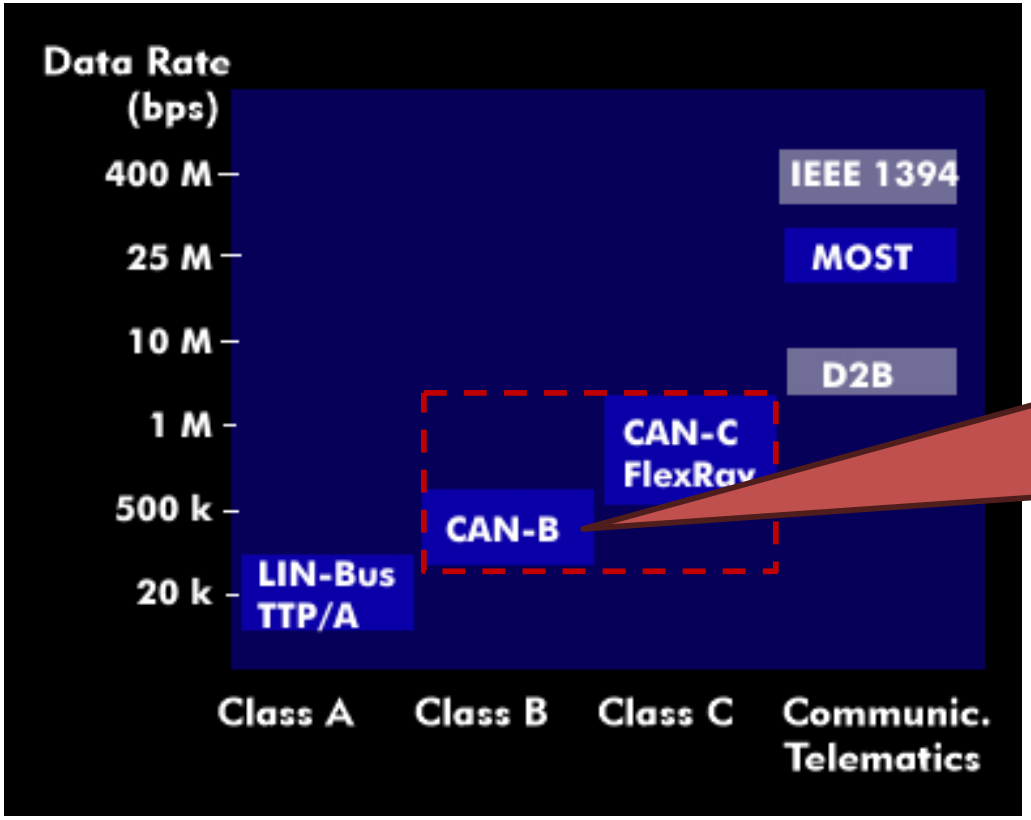

Controller Area Network (CAN) is widely deployed in powertrain and body control domains, as well as being a standard interface to retrieve OBD (On-Board Diagnostics) data from vehicles

::.. In-Vehicle Protocols – 2/3

The variety and diversity of the automotive applications, each with varying demands, and paved the way for the exploitation of various kinds of protocols:

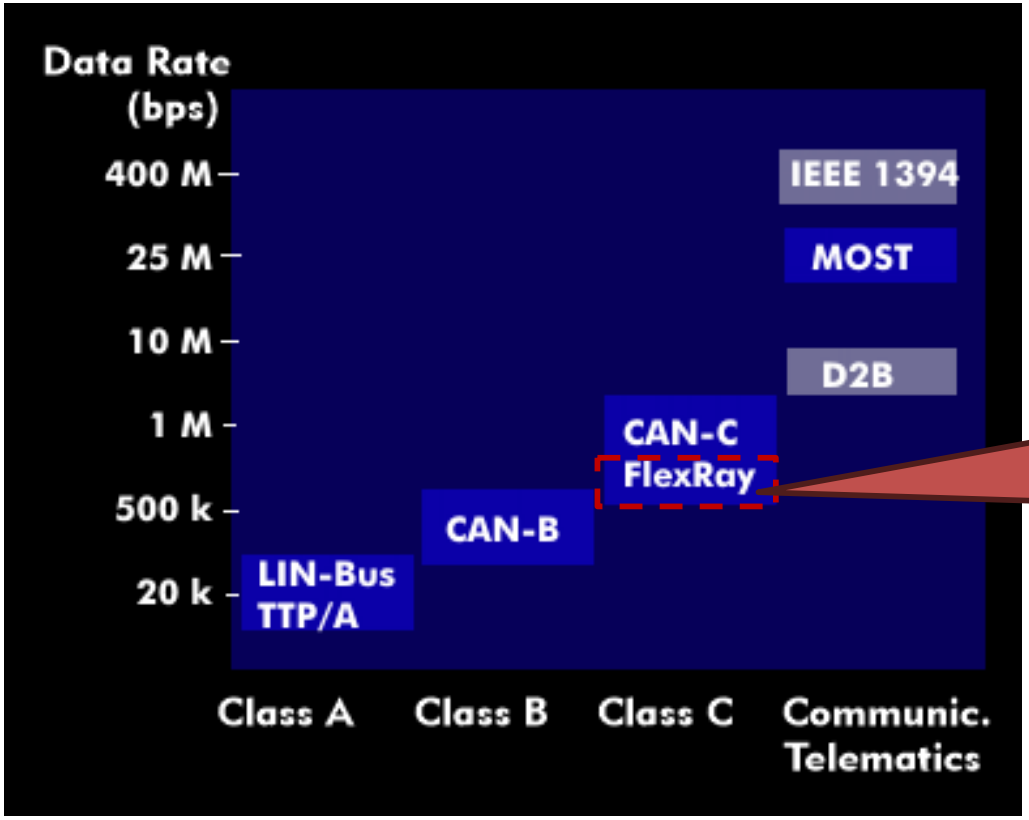

FlexRay has high determinism and fault-tolerance, which are usually required in applications, as advanced chassis control and communication backbones

::.. In-Vehicle Protocols – 2/3

The variety and diversity of the automotive applications, each with varying demands, and paved the way for the exploitation of various kinds of protocols:

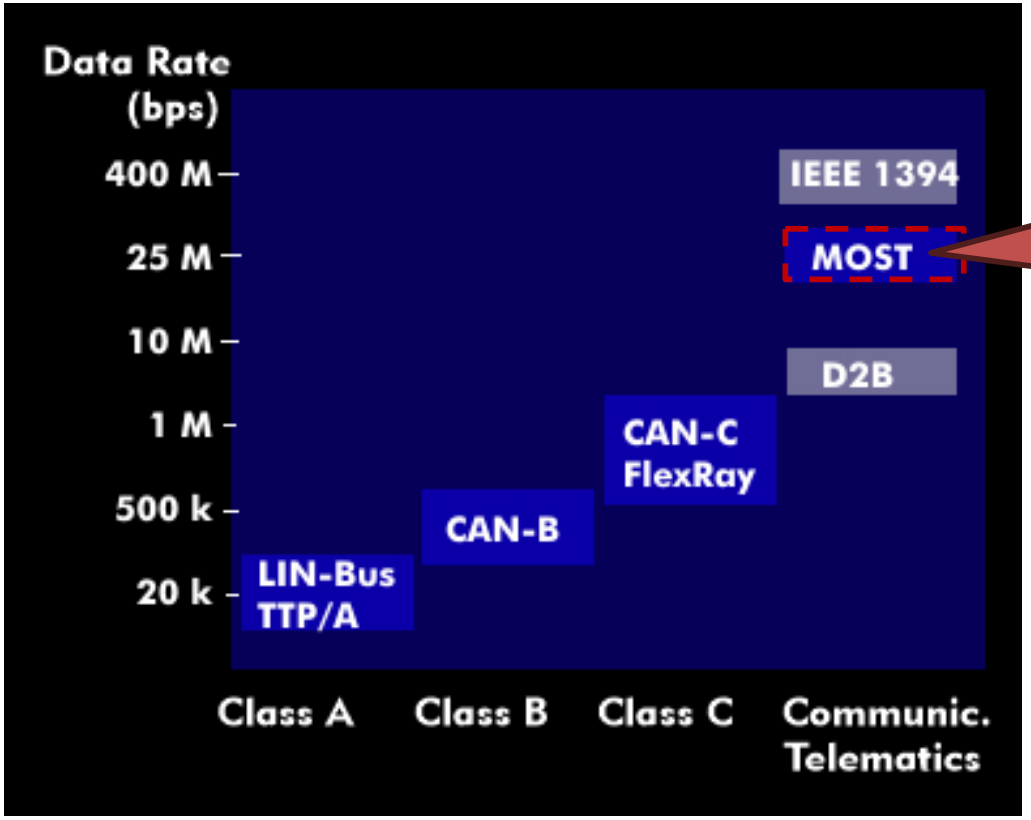

MOST network is primarily deployed as the carrier of infotainment data, which usually demand very high bandwidth and are more common in premium vehicles.

::.. In-Vehicle Protocols – 2/3

The variety and diversity of the automotive applications, each with varying demands, and paved the way for the exploitation of various kinds of protocols:

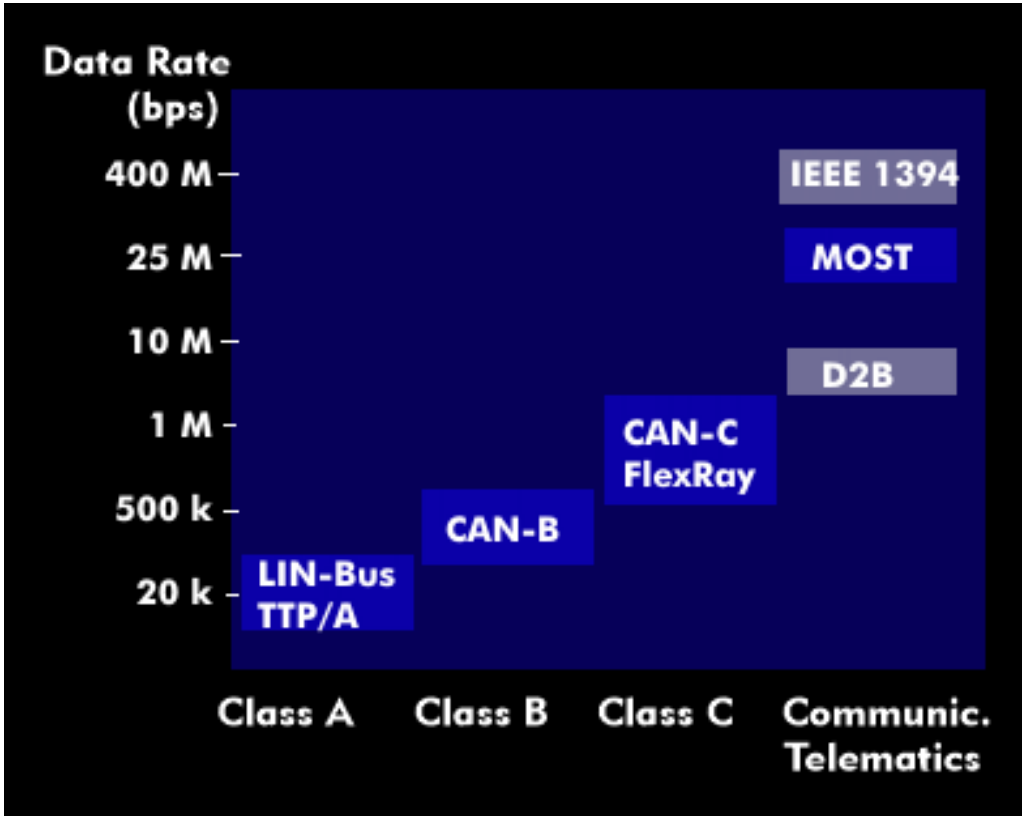

Ethernet is still relatively new and may have only been used in applications such as ECU flashing and limited network backbone connections. However, it has great potential for high speed very limited latency and jitter, so it may acquire more attention.

::.. In-Vehicle Protocols – 3/3

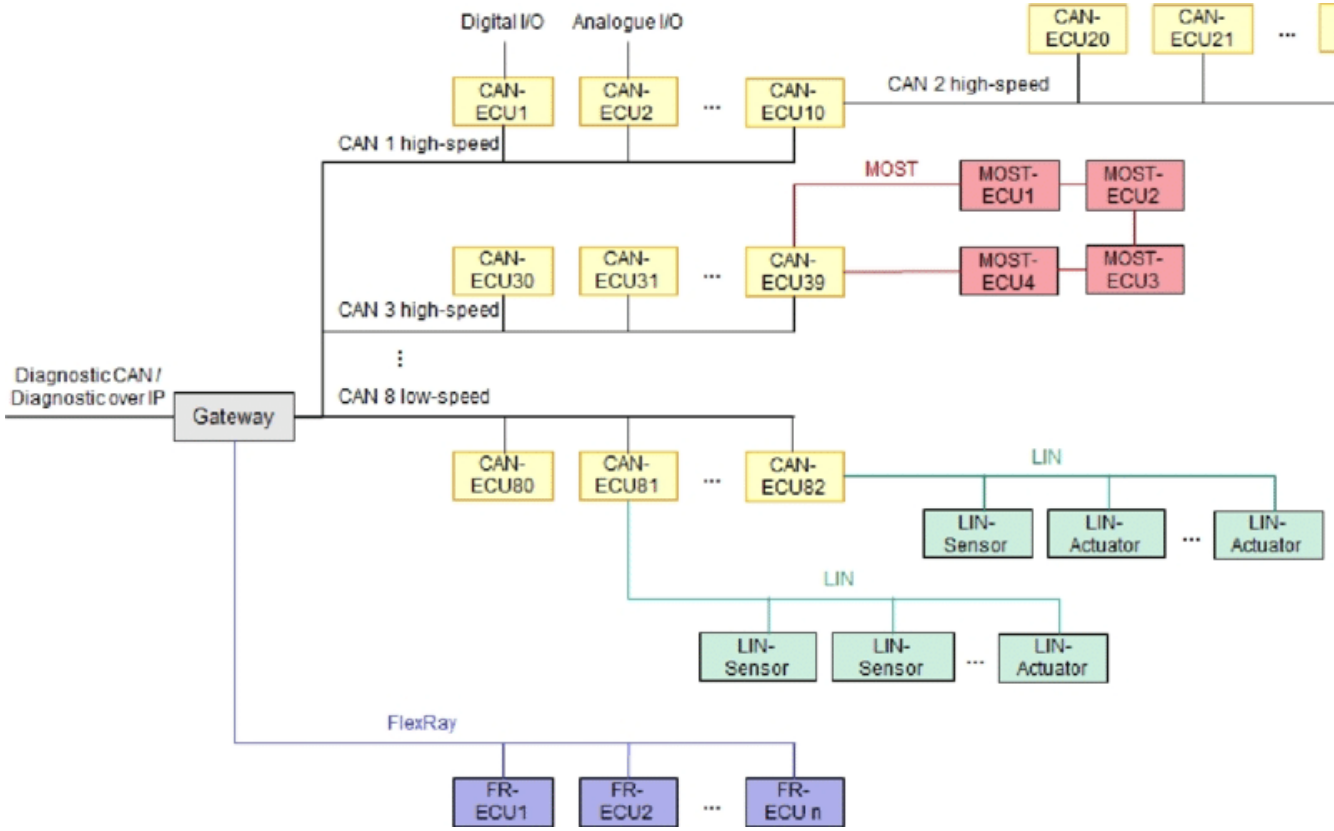

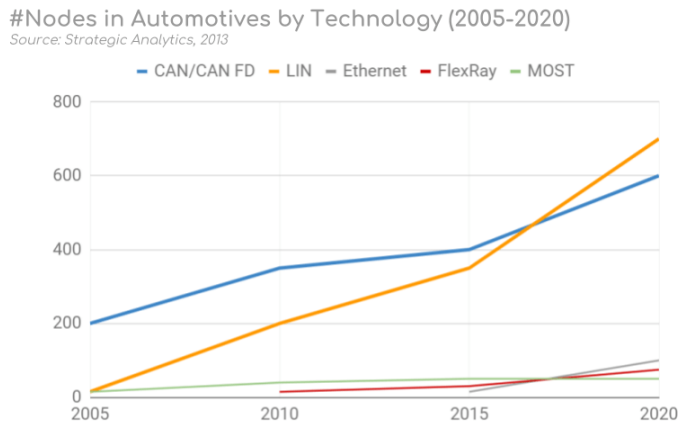

::.. In-Vehicle Protocols – 3/3

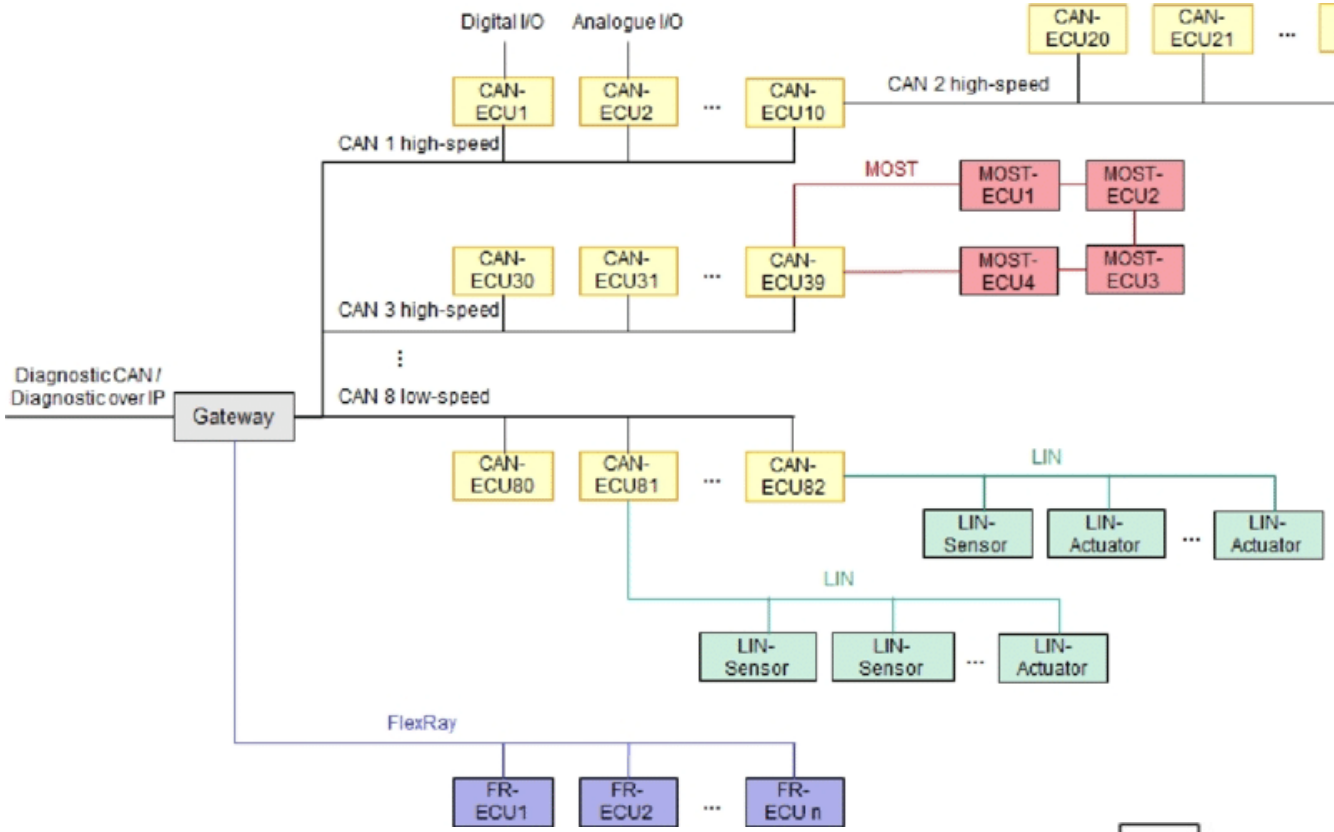

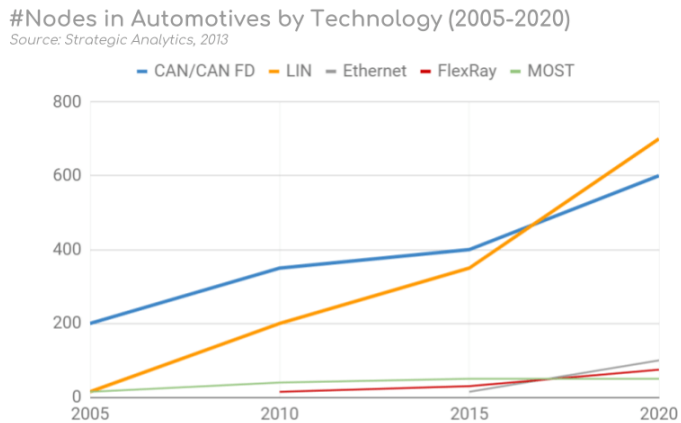

The greatest advantage of Bus systems lies in the reduced amount of wiring combined with an ingenious prevention of message collision (meaning no data will be lost during message transmission).

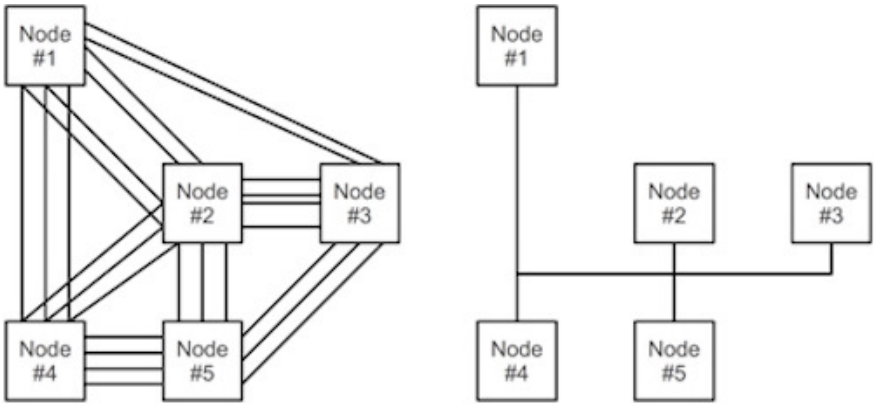

::.. In-Vehicle Middleware

As in-vehicle networks grow fast in size and complexity, problems such as software heterogeneity and reusability have also quickly emerged.

Middleware technology has subsequently been widely used by the automotive industry to eliminate software heterogeneity and facilitate software integration of in-vehicle networks but also to ensure QoS properties of communication system.

It consists into inserting an additional software layer between communication protocols and the applications. Currently, the main available middleware include:

- Open System and the Corresponding Interfaces for Automotive Electronics/Vehicle Distributed eXecutive (OSEK/VDX), Volcano, AUTomotive Open System Architecture (AUTOSAR).

::.. Local Interconnect Network – 1/5

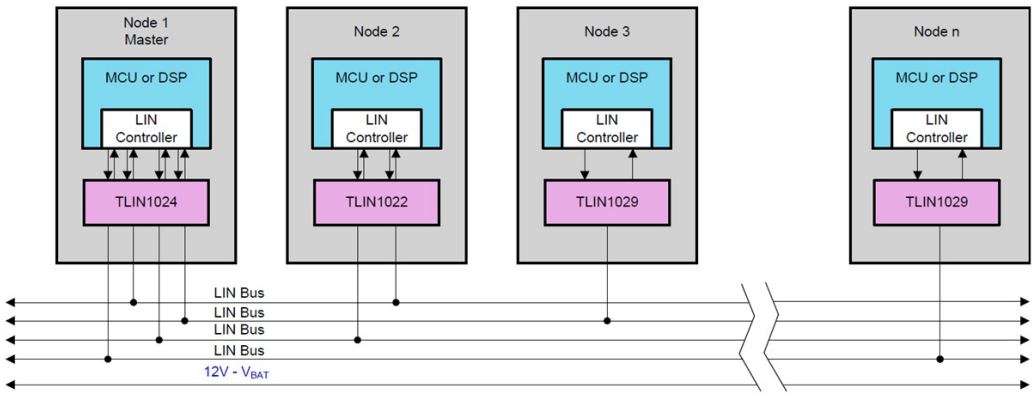

LIN is a low-cost serial bus with a single-master/multiple-slave architecture, where master hold accurate clocks and polls up to 16 slaves (i.e. no bus arbitration).

Implementation is based on the common Universal Asynchronous Receiver/Transmitter (UART) and Serial Communications Interface (SCI) hardware.

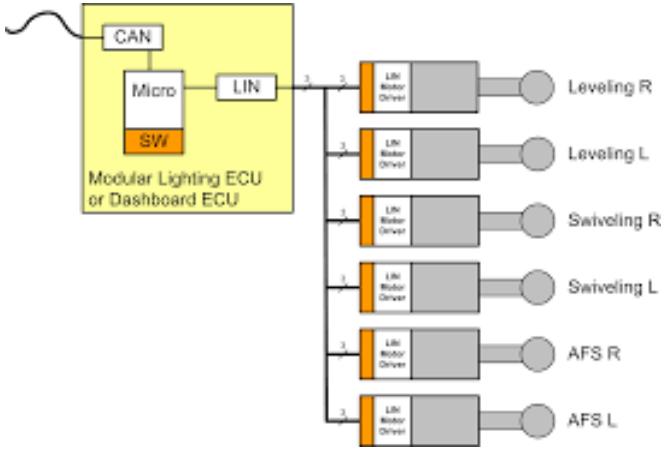

LIN can be implemented with just a single wire, and can be a sub-bus for CAN or FlexRay so as to achieve a hierarchical multiplex system.

::.. Local Interconnect Network – 2/5

The message header consists of a break used to identify the start of the frame and the sync field used by the slave node for clock synchronization.

The identifier (ID) consists of a 6-bit message ID and a 2-bit parity field. The ID denotes a specific message address but not the destination. Upon reception and interpretation of the ID, one slave begins the message response, by transmitting 2, 4 or 8 bytes of data. The data length can be customized, but it is typically linked to the ID range. The frae terminates with an 8-bit checksum by summing the data bytes only or also the identifier field.

The master controls the sequencing of message frames, which is fixed in a schedule.

::.. Local Interconnect Network – 3/5

ID (dec)	ID (hex)	LIN Frame Type
0-59	00-3B	Unconditional
0-59	00-3B	Event Triggered
0-59	00-3B	Sporadic
60-61	3C-3D	Diagnostic
62	3E	User Defined
63	3F	Reserved

Multiple types of LIN frames exist, though in practice the vast majority of communication is done via “unconditional frames".

Unconditional Frames
The default form of communication where the master sends a header, requesting information from a specific slave. The relevant slave reacts accordingly

Event Trigger Frames
The master polls multiple slaves. A slave responds if its data has been updated, with its protected ID in the 1st data byte. If multiple respond, a collision occurs and the master defaults to unconditional frames

Sporadic Frames
Only sent by the master if it knows a specific slave has updated data. The master "acts as a slave" and provides the response to its own header - letting it provide slave nodes with "dynamic" info

Diagnostic Frames
Since LIN 2.0, IDs 60-61 are used for reading diagnostics from master or slaves. Frames always contain 8 data bytes. ID 60 is used for the master request, 61 for the slave response

User Defined Frames
ID 62 is a user-defined frame which may contain any type of information

Reserved Frames
Reserved frames have ID 63 and must not be used in LIN 2.0 conforming LIN networks

::.. Local Interconnect Network – 4/5

LIN Description File (LDF)

```
Signals {
  BatteryVoltage: 16, 65535, IBS, SG ;
}
```

Signal name — Bit length

Message name — LIN ID — Length

```
Frames {
  IBS_DataAcquisition: 33, IBS, 8 {
    BatteryCurrent, 0 ;
    BatteryVoltage, 16 ;
    CentreTapVoltage, 32 ;
    InChipTemperature, 48 ;
    CurrentRangeMeas, 57 ;
  }
```

Bit start

```
Signal_encoding_types {
    Enc_BatteryVoltage {
      physical_value, 0, 32000, 0.001, 0, "Volt" ;
      physical_value, 32001, 65533, 1, 0, "invalid" ;
      logical_value, 65534, "BatteryVoltage_Error" ;
      logical_value, 65535, "LIN_INIT" ;
    }
  }
```

min, max, scale, offset, "unit"

Raw LIN bus data has to be decoded to physical values.

This involves extracting LIN signals from the LIN frame payload and decoding these to human-readable form.

- ID: Which LIN frame ID contains the LIN bus signal
- Name: The LIN signal name should be known
- Start bit: Start position of the LIN signal in the payload
- Length: Length of the LIN bus signal
- Endianness: LIN signals are little endian (Intel byte order)
- Scale: How to multiply the decimal value of the LIN signal bits
- Offset: By what constant should the LIN signal value be offset
- Unit/Min/Max: Additional supporting information (optional)

::.. Local Interconnect Network – 5/5

LIN allows devices to enter the sleep state.

- All slaves may be forced into sleep mode by the master sending a diagnostic master request frame (ID=60) with the first data byte equal to zero.
- Slaves also automatically enter sleep mode if the LIN is inactive for more than four seconds.

LIN also offers a mechanism for waking devices on the bus, initiated by any node on the bus (a slave as well as the master).

- Each slave should detect the wakeup request and be ready to process headers within 100 ms. The master should also detect the wakeup request and start sending headers.
- If the master does not issue headers within 150 ms after receiving the wakeup request, then the slave requesting wakeup may try issuing an additional wakeup request (and waiting for another 150 ms).
- This repeats until the master responses.

::.. Controller Area Network – 1/5

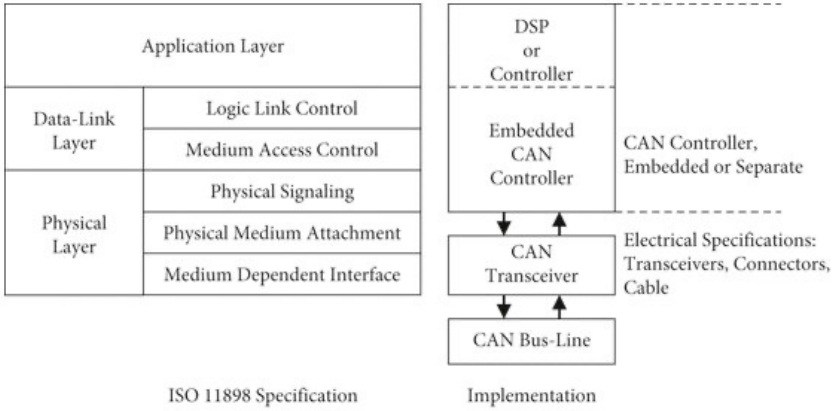

CAN is a priority-based bus standardized by the Layered ISO 11898 Standard Architecture.

CAN controller a carrier-sense, multiple-access protocol with collision detection and arbitration on message priority (CSMA/CD+AMP).

- CSMA: each node on a bus must wait for a prescribed period of inactivity before attempting to send a message.
- CD+AMP means that collisions are resolved through a bit-wise arbitration, based on a preprogrammed priority of each message in the identifier field of a message. The higher priority identifier always wins bus access.

::.. Controller Area Network – 2/5

CAN is a two-wire, half duplex, high-speed network system, that is far superior to conventional serial technologies w.r.t. functionality and reliability

With its 1 MBit/sec baudrate, CAN can easily beat a 100 MBit/sec TCP/IP connection for short reaction times, timely error detection, quick error recovery and error repair.

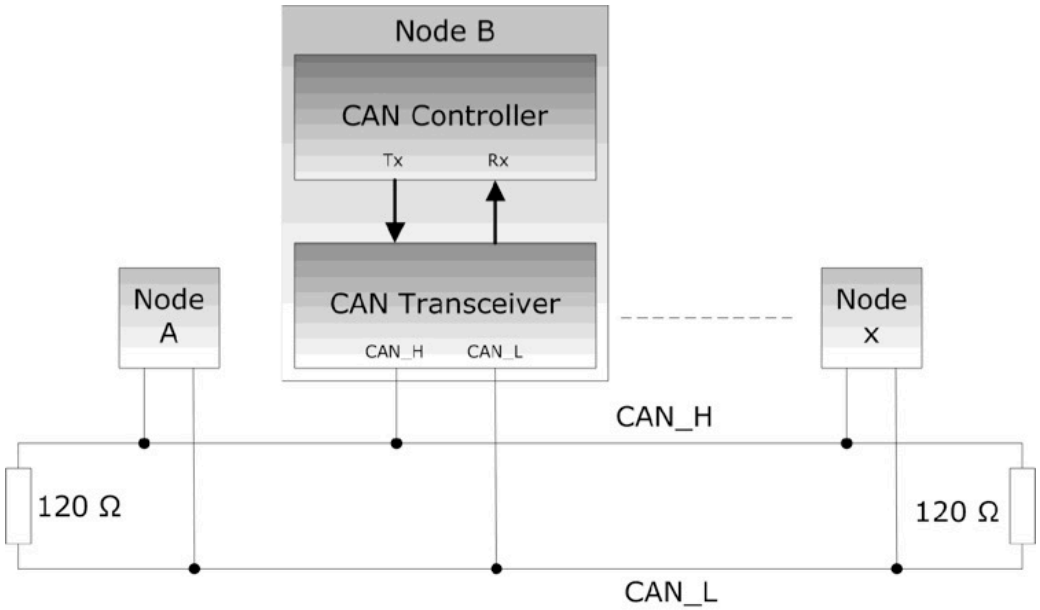

A great variety of microprocessor chips provides interfaces such as CAN. However, that does not mean that you can use the chip “as is” but it requires some kind of a “hardware driver.”

::.. Controller Area Network – 3/5

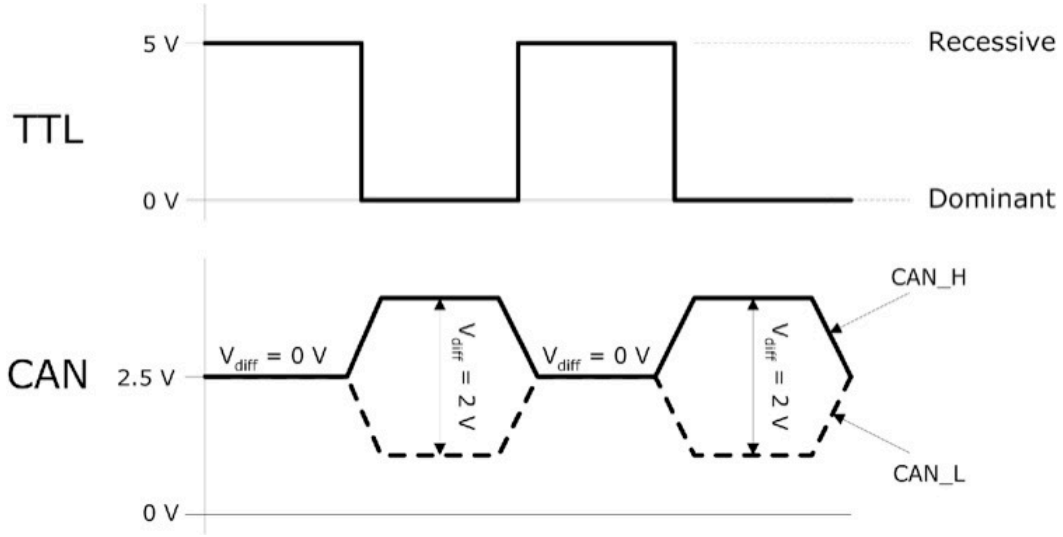

We need a line driver (transceiver) to convert the controller's TTL signal to the actual CAN level, which is a differential voltage.

CAN alone is not suitable to provide a minimum of network management and messages with more than eight data bytes.

As a consequence, higher-layer protocols were designed to provide an improved networking technology that support messages of unlimited length and allow network management, which includes the use of node IDs. CAN supports only message IDs where one node can manage multiple message IDs, as LIN.

::.. Controller Area Network – 3/5

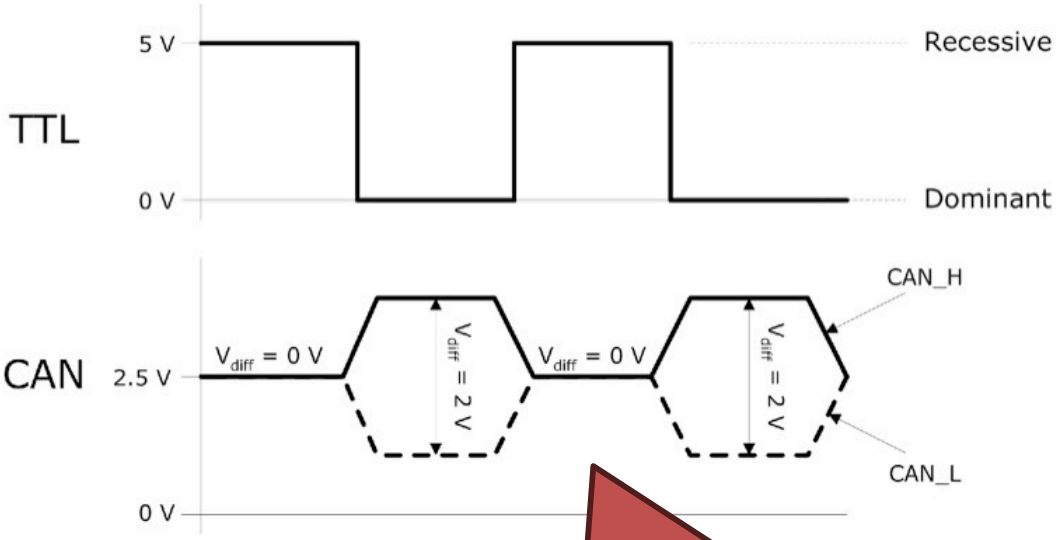

We need a line driver (transceiver) to convert the controller's TTL signal to the actual CAN level, which is a differential voltage.

CAN alone is not to provide a minimum of network managem

As a cor d to provide port messages ent, which inc sage IDs where one node can manage multiple message IDs, as LIN.

The CANL line is always the complement of CANH. For arbitration to work, a CAN device must monitor both what it is sending and what is currently on the bus, i.e., what it's receiving.

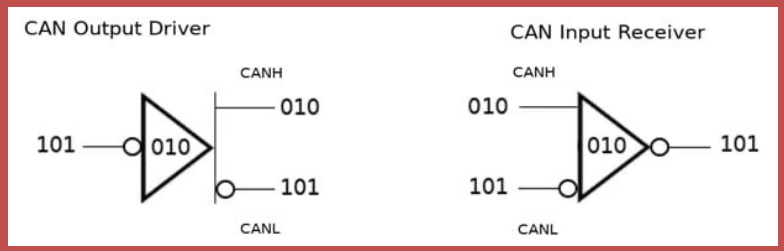

::.. Controller Area Network – 4/5

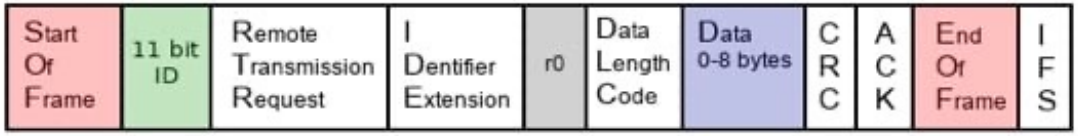

The standard CAN message frame consists of a number of bit fields.

The first bit is the start of frame (SOF). This dominant bit represents the start of a CAN message. Next is the 11-bit identifier, which establishes the priority of the CAN message. The smaller the identifier, the higher the priority of the message.

The remote transmission request (RTR) bit is normally dominant, but it goes recessive when one node is requesting data from another. The identifier extension (IDE) bit is dominant when a standard CAN frame is being sent and not an extended one. The r0 bit is reserved and not currently used. The data length code (DLC) nibble signifies how many bytes of data are in this message.

Next is the data itself, being as many bytes as represented in the DLC bits. The cyclic redundancy check (CRC) is a 16-bit checksum for detecting errors in the transmitted data.

::.. Controller Area Network – 5/5

If the message is properly received, the receiving node overwrites the recessive acknowledge bit (ACK) with a dominant bit. The ACK also contains a delimiter bit to keep things synchronized. The end of frame (EOF) signifies the end of the CAN message and is 7 bits wide, for detecting bit-stuffing errors.

The last part of a CAN message is the interframe space (IFS), used as a time delay.

Priority Arbitration: Nodes 1–3 are all sending a stream of bits. This stream of bits represents the message identifiers and their priority. For starters, all three nodes send a '1', which is represented on the CAN bus as a recessive bit.

::.. Controller Area Network – 5/5

If the message is properly received, the receiving node overwrites the recessive acknowledge bit (ACK) with a dominant bit. The ACK also contains a delimiter bit to keep things synchronized. The end of frame (EOF) signifies the end of the CAN message and is 7 bits wide, for detecting bit-stuffing errors.

The last part of a CAN message is the interframe space (IFS), used as a time delay.

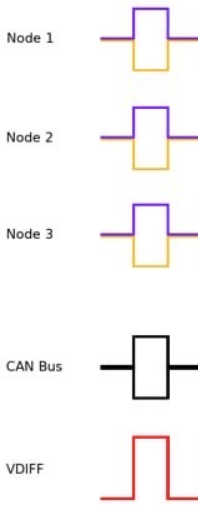

Priority Arbitration: Next, each node sends a '0', or dominant bit. The third bit placed on the bus is another '1', or recessive bit. At this point, none of the nodes have detected any conflict with another node on the bus, so they keep transmitting.

::.. Controller Area Network – 5/5

If the message is properly received, the receiving node overwrites the recessive acknowledge bit (ACK) with a dominant bit. The ACK also contains a delimiter bit to keep things synchronized. The end of frame (EOF) signifies the end of the CAN message and is 7 bits wide, for detecting bit-stuffing errors.

The last part of a CAN message is the interframe space (IFS), used as a time delay.

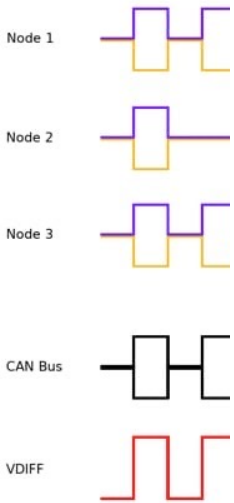

Priority Arbitration: For the fourth bit, Node 1 sends a '0' or dominant bit. Node 2 transmits a recessive bit, yet detects a dominant bit on the bus and immediately backs off. Node 3 continues to transmit since it read back the same dominant bit that it transmitted.

::.. Controller Area Network – 5/5

If the message is properly received, the receiving node overwrites the recessive acknowledge bit (ACK) with a dominant bit. The ACK also contains a delimiter bit to keep things synchronized. The end of frame (EOF) signifies the end of the CAN message and is 7 bits wide, for detecting bit-stuffing errors.

The last part of a CAN message is the interframe space (IFS), used as a time delay.

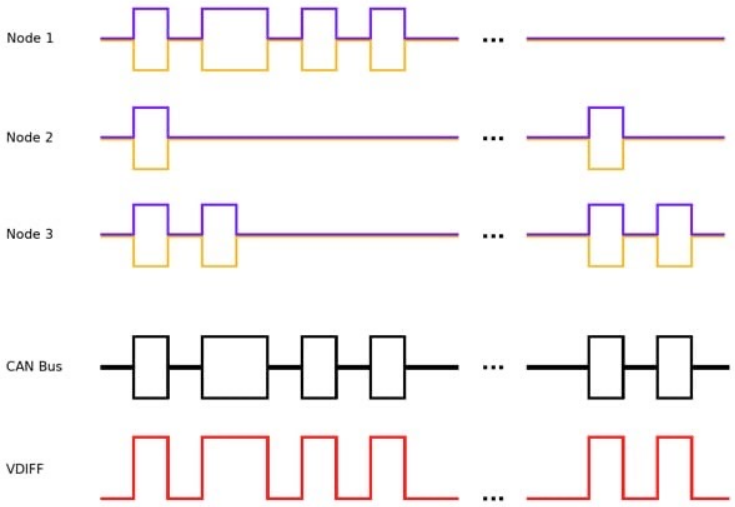

Priority Arbitration: When the fifth bit is placed on the bus, Node 3 then recognizes that it is at a lower priority and stops transmitting. Both Node 2 and Node 3 wait a certain amount of time before attempting again.

::.. FlexRay – 1/3

FlexRay is a communication bus designed to ensure high data rates, fault tolerance, operating on a time cycle, split into static and dynamic segments for event-triggered and time-triggered communications. It is faster and more reliable than CAN.

It uses unshielded twisted pair cabling to connect nodes together. Differential signaling on each pair of wires reduces the effects of external noise on the network without expensive shielding.

FlexRay supports simple multi-drop passive connections as well as active star connections for more complex networks.

::.. FlexRay – 2/3

The FlexRay protocol is a unique time-triggered protocol that provides options for deterministic data that arrives in a predictable time frame (down to the microsecond) as well as CAN-like dynamic event-driven data to handle a large variety of frames.

As with any multi-drop bus, only one node can electrically write data to the bus at a time. FlexRay manages multiple nodes with a Time Division Multiple Access or TDMA scheme. Every FlexRay node is synchronized to the same clock, and each nodes waits for its turn to write on the bus. Because the timing is consistent in a TDMA scheme, FlexRay is able to guarantee determinism or the consistency of data deliver to nodes on the network. This provides many advantages for systems that depend on up-to-date data between nodes.

::.. FlexRay – 3/3

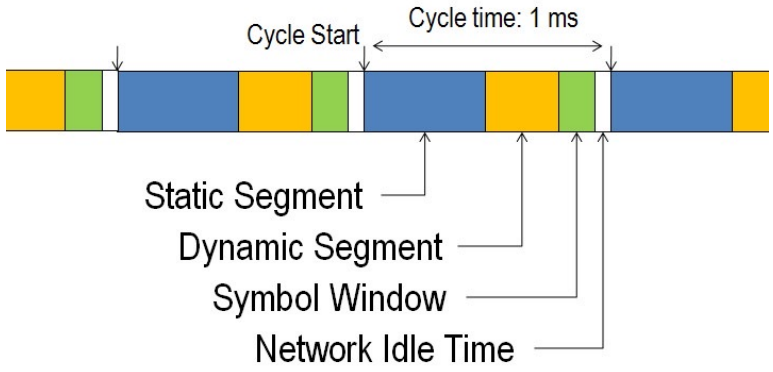

The FlexRay communication cycle has a fixed duration when the network is designed, but is typically around 1-5 ms. There are four main parts to a communication cycle:

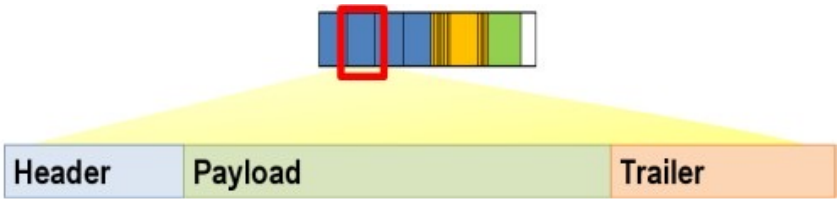

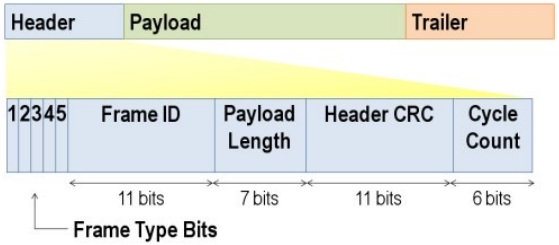

- Static Segment - Reserved slots for deterministic data that arrives at a fixed period.
- Dynamic Segment – It behaves in a fashion similar to CAN and is used for a wider variety of event-based data that does not require determinism.
- Symbol Window - Typically used for network maintenance and signaling for starting the network.
- Network Idle Time - A known "quiet" time used to maintain synchronization between node clocks.

::.. Media-Oriented System Transport

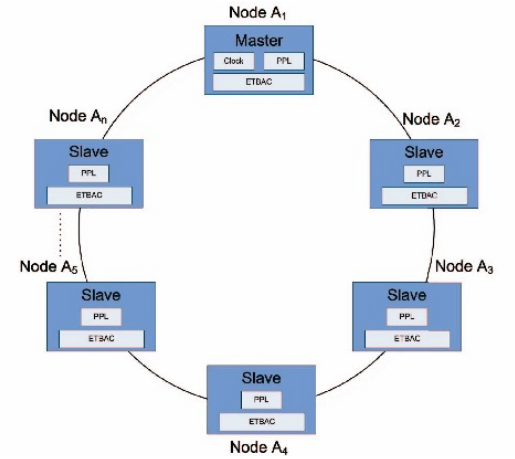

MOST is a high-speed multimedia network technology using a daisy-chain topology or ring topology and synchronous serial communication.

In a MOST network, one device is designated the timing master. Its role is to continuously supply the ring with MOST frames. A preamble is sent at the beginning of the frame transfer. The other devices, known as timing followers, use the preamble for synchronization. Encoding based on synchronous transfer, allows constant post-sync for the timing followers.

::.. Automotive Ethernet

Automotive Ethernet is a form of Ethernet network with a physical layer adapted to automotive use cases, capable of electromagnetic compatibility and immunity requirements in automotive conditions. It enables higher baud rate communications than traditional automotive network technologies and allows the re-use of Internet Protocol (IP) software technologies.

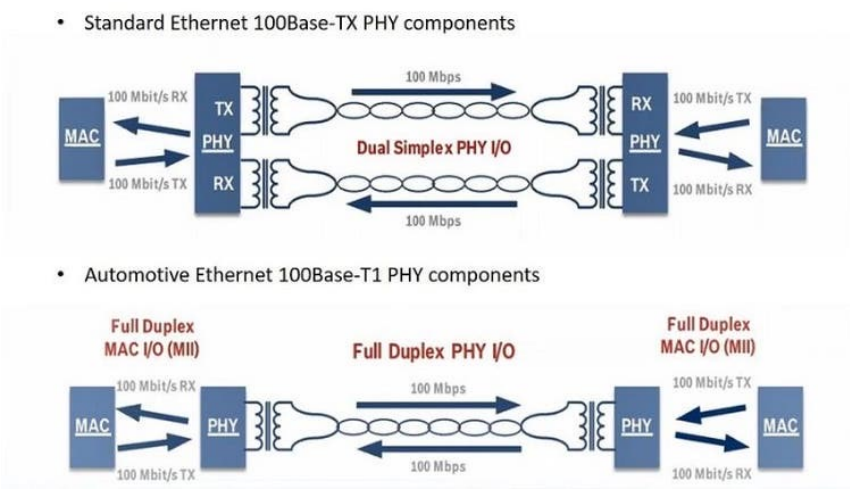

The differences between Ethernet and automotive Ethernet are in the physical layer, using lower cost single twisted pair with full duplex communication, rather than dual twisted pair, this may be Shielded (STP) or Un-shielded (UTP) twisted pair depending on needs.